Go to cover page
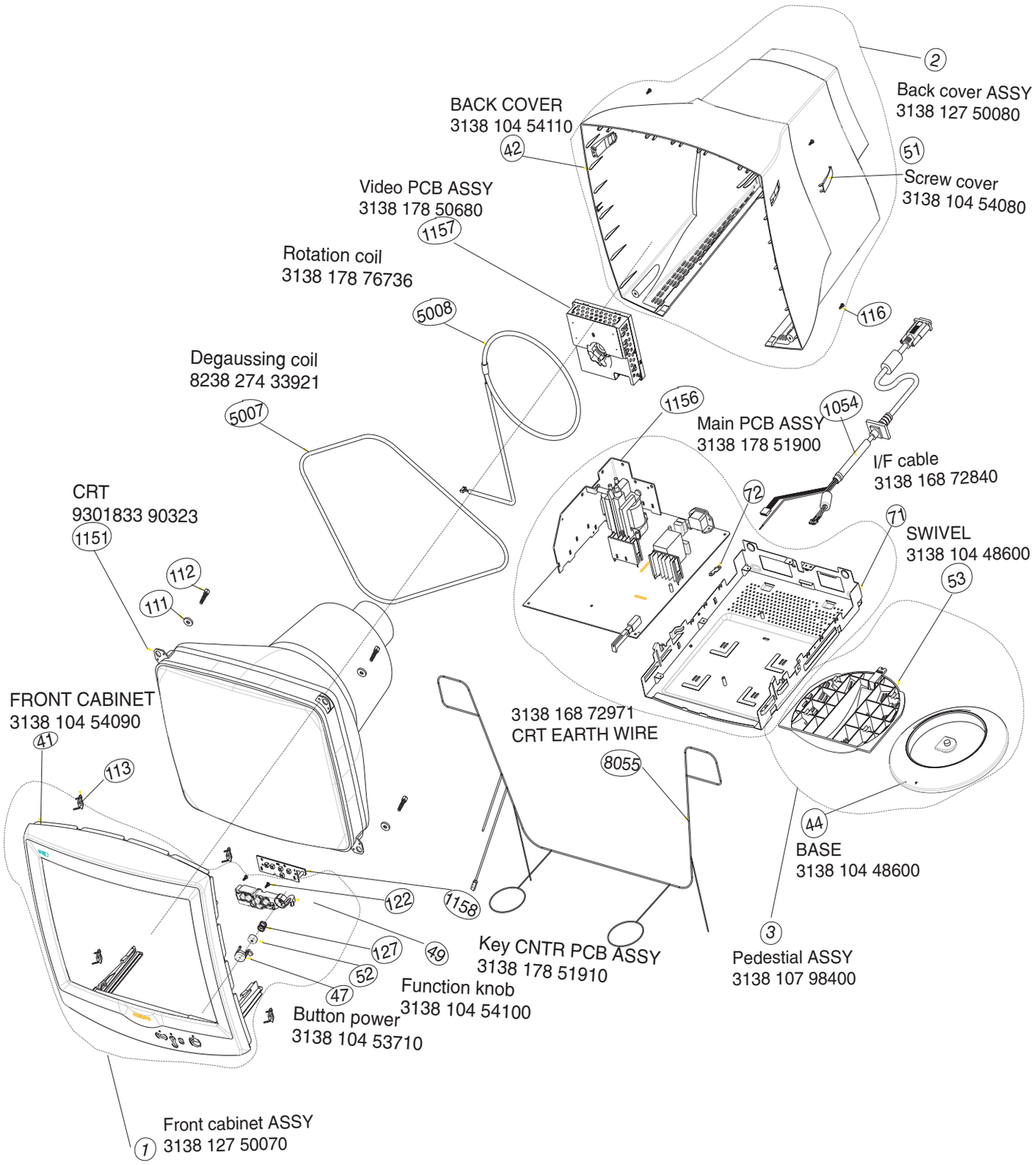
Exploded View